Work Order ID 66465

Tuesday, February 15, 2011 11:25:56 AM

Item ID: D2221
Revision ID:
Item Name: 350 Basket Base
Start Date: 2/16/2011 **Start Qty:** 1.00
Required Date: 2/28/2011 **Req'd Qty:** 1.00
Reference:

Accept

Setup Start
Stop

Cust Item ID:
Customer:

Run Start
Stop

Approvals: **Process Plan:** MK **Date:** 11-02-19 **Tooling:** **Date:**
QC: **Date:** **SPC (Y/N):** **Date:**

Sequence ID/ Work Center ID	Operation Description	Set Up/ Run Hours	Tool ID	Tool #	Plan Code	Accept Qty	Reject Qty	Reject Number	Insp. Stamp
Draw Nbr	**Revision Nbr**								
D2221	Rev H								
100		0.00							
Large Fab	Large Fab								
Large Fab	**Memo**	0.00							
Large Fab	1- assemble all ribs and both D2581 in DT9444 jig, weld as per dwg D2221 2- remove basket from jig and weld D3442-1 shims and D2232-3 hinges as per dwg D2221 3- tack weld mesh on basket as per dwg D2221 A/R ER316 S.S. Rod Batch: M114649 ***PLEASE NOTE*** IF MAKING -041A OR -043A : DRILL HOLES FOR GAS SPRING IN D3825-041 AS PER DSI 9473								
110	QC9- Inspect visual per QSI004- Fusion Welds	0.00							
QC	**Memo**	0.00							
Quality Control									

SY 11.03.11 (1x)

PL 11.03.14

Dart Aerospace Ltd

W/O:		WORK ORDER CHANGES					
DATE	STEP	PROCEDURE CHANGE	By	Date	Qty	Approval Chief Eng / Prod Mgr	Approval QC Inspector

Part No: _____ **PAR #:** _____ **Fault Category:** _____ **NCR:** Yes No **DQA:** _____ **Date:** _____

Resolution: _____ **Disposition:** _____ **QA: N/C Closed:** _____ **Date:** _____

NCR:		WORK ORDER NON-CONFORMANCE (NCR)						
DATE	STEP	Description of NC Section A	Corrective Action Section B			Verification Section C	Approval Chief Eng	Approval QC Inspector
			Initial Chief Eng	Action Description Chief Eng	Sign & Date			

NOTE: Date & initial all entries

H:\fFORMS\Quality Assurance\approved QA\NCRWO RevE

Work Order ID 66465

Tuesday, February 15, 2011 11:25:56 AM

Item ID: D2221
Revision ID:
Item Name: 350 Basket Base
Start Date: 2/16/2011 **Start Qty:** 1.00
Required Date: 2/28/2011 **Req'd Qty:** 1.00
Reference:

Accept

Setup Start
Stop

Cust Item ID:
Customer:

Run Start
Stop

Approvals: **Process Plan:** _____ **Date:** _____ **Tooling:** _____ **Date:** _____
QC: _____ **Date:** _____ **SPC (Y/N):** _____ **Date:** _____

Sequence ID/ Work Center ID	Operation Description	Set Up/ Run Hours	Tool ID	Tool #	Plan Code	Accept Qty	Reject Qty	Reject Number	Insp. Stamp
120	QC6- Inspect dimensions to drawing	0.00							
QC	Memo	0.00							
Quality Control									
125	Pressure Wash per QSI005 4.3	0.00							
HandFinish	Memo	0.00							
Hand Finishing									

8 11/03/14

1 BL 11-3-14.

Dart Aerospace Ltd

W/O:		WORK ORDER CHANGES					
DATE	STEP	PROCEDURE CHANGE	By	Date	Qty	Approval Chief Eng / Prod Mgr	Approval QC Inspector

Part No: _____ **PAR #:** _____ **Fault Category:** _____ **NCR:** Yes No **DQA:** _____ **Date:** _____

Resolution: _____ **Disposition:** _____ **QA: N/C Closed:** _____ **Date:** _____

NCR:		WORK ORDER NON-CONFORMANCE (NCR)						
DATE	STEP	Description of NC Section A	Corrective Action Section B			Verification Section C	Approval Chief Eng	Approval QC Inspector
			Initial Chief Eng	Action Description Chief Eng	Sign & Date			

NOTE: Date & initial all entries

H:\fFORMS\Quality Assurance\approved QA\NCRWO RevE

Work Order ID 66465

Tuesday, February 15, 2011 11:25:56 AM

Item ID: D2221 **Accept** **Setup Start**

Revision ID:

Item Name: 350 Basket Base **Stop**

Start Date: 2/16/2011 **Start Qty:** 1.00 **Cust Item ID:**

Required Date: 2/28/2011 **Req'd Qty:** 1.00 **Customer:**

Reference:

Approvals: **Process Plan:** _____ **Date:** _____ **Tooling:** _____ **Date:** _____ **Run Start**

QC: _____ **Date:** _____ **SPC (Y/N):** _____ **Date:** _____ **Stop**

Sequence ID/ Work Center ID	Operation Description	Set Up/ Run Hours	Tool ID	Tool #	Plan Code	Accept Qty	Reject Qty	Reject Number	Insp. Stamp
130 Powdercoat Powder Coating	White Gloss(Ref:4.3.5.2) per QSI005 4.3-Steel M115951 **Memo** 1- Plug holes prior to 1ST COAT: START TIME: 11:00 400 OVEN TEMPERATURE: FINISH TIME: 11:30 **********2nd coat if necessary********** 2ND COAT: START TIME: _____ OVEN TEMPERATURE: _____ FINISH TIME: _____	0.00 0.00				1	BR 11-3-14.		
140 QC Quality Control	QC3- Inspect Part Finish **Memo**	0.00 0.00					11/03/15		

Dart Aerospace Ltd

W/O:		WORK ORDER CHANGES					
DATE	STEP	PROCEDURE CHANGE	By	Date	Qty	Approval Chief Eng / Prod Mgr	Approval QC Inspector

Part No: _____ **PAR #:** _____ **Fault Category:** _____ **NCR:** Yes No **DQA:** _____ **Date:** _____

Resolution: _____ **Disposition:** _____ **QA: N/C Closed:** _____ **Date:** _____

NCR:		WORK ORDER NON-CONFORMANCE (NCR)						
DATE	STEP	Description of NC Section A	Corrective Action Section B			Verification Section C	Approval Chief Eng	Approval QC Inspector
			Initial Chief Eng	Action Description Chief Eng	Sign & Date			

NOTE: Date & initial all entries

H:\fFORMS\Quality Assurance\approved QA\NCRWO RevE

Work Order ID 66465

Tuesday, February 15, 2011 11:25:56 AM

Item ID: D2221
Revision ID:
Item Name: 350 Basket Base
Start Date: 2/16/2011 **Start Qty:** 1.00
Required Date: 2/28/2011 **Req'd Qty:** 1.00
Reference:

Accept

Setup Start
Stop

Cust Item ID:
Customer:

Approvals: **Process Plan:** _____ **Date:** _____ **Tooling:** _____ **Date:** _____
QC: _____ **Date:** _____ **SPC (Y/N):** _____ **Date:** _____

Run Start
Stop

Sequence ID/ Work Center ID	Operation Description	Set Up/ Run Hours	Tool ID	Tool #	Plan Code	Accept Qty	Reject Qty	Reject Number	Insp. Stamp
150	Identify as per dwg & Stock Location: GA	0.00							
Packaging	Memo w/o 66464	0.00							
Packaging							11/03/15		
160	QC21- Final Inspection - Work Order Release	0.00							
QC	Memo	0.00					11/3/15		
Quality Control									

ME
11-03-15

Dart Aerospace Ltd

W/O:		WORK ORDER CHANGES					
DATE	STEP	PROCEDURE CHANGE	By	Date	Qty	Approval Chief Eng / Prod Mgr	Approval QC Inspector

Part No: _____ **PAR #:** _____ **Fault Category:** _____ **NCR:** Yes No **DQA:** _____ **Date:** _____

Resolution: _____ **Disposition:** _____ **QA: N/C Closed:** _____ **Date:** _____

NCR:		WORK ORDER NON-CONFORMANCE (NCR)						
DATE	STEP	Description of NC Section A	Corrective Action Section B			Verification Section C	Approval Chief Eng	Approval QC Inspector
			Initial Chief Eng	Action Description Chief Eng	Sign & Date			

NOTE: Date & initial all entries

H:\fFORMS\Quality Assurance\approved QA\NCRWO RevE

Picklist Print

Tuesday, February 15, 2011 11:25:49 AM

4

Work Order ID: 66465

Parent Item: D2221

Parent Item Name: 350 Basket Base

Start Date: 2/16/2011 **Required Date:** 2/28/2011

Start Qty: 1.00 **Required Qty:** 1.00

Comments:
IPP Rev:J 05.09.02 Added D3442-1 □KJ/JLM
IPP Rev:K 08-08-29 revG as per dwg DD verified by:EC
IPP Rev:L 08-09-24 plug holes prior to powder coat DD verified by:EC
IPP Rev:M 08-12-02 revH as per dwg DD verified by:EC IPP Rev:N
10.06.29 added pressure wash DD verf:EC

Component Item ID/ Item Name	Replacement Item ID	Mfg/ Purch	Bin Item	Primary Location	Last Location	Route Seq ID	Unit of Measure	Qty on Hand	Qty per Kit	Total Qty	Qty Issued	Date Issued	Status
✓ D2221-1 Rib		Manufactured	No			100	Each	11.0000	1	1			
				Location		**Loc Qty**		**Loc Code**					
				WA		11							
					63628	2							
					64651	9				1x			
✓ D2221-5 Rib		Manufactured	No			100	Each	6.0000	2	2			
				Location		**Loc Qty**		**Loc Code**					
				WA		6							
					64652	6				2x			
✓ D2221-7 Rib		Manufactured	No			100	Each	3.0000	1	1			
				Location		**Loc Qty**		**Loc Code**					
				WA		3							
					64653	3				1x			

DD 11·03·08

DD 11·03·08

DD 11·03·08

Dart Aerospace Ltd

W/O:		WORK ORDER CHANGES					
DATE	STEP	PROCEDURE CHANGE	By	Date	Qty	Approval Chief Eng / Prod Mgr	Approval QC Inspector

Part No: _____ **PAR #:** _____ **Fault Category:** _____ **NCR:** Yes No **DQA:** _____ **Date:** _____

Resolution: _____ **Disposition:** _____ **QA: N/C Closed:** _____ **Date:** _____

NCR:		WORK ORDER NON-CONFORMANCE (NCR)						
DATE	STEP	Description of NC Section A	Corrective Action Section B			Verification Section C	Approval Chief Eng	Approval QC Inspector
			Initial Chief Eng	Action Description Chief Eng	Sign & Date			

NOTE: Date & initial all entries

H:\fFORMS\Quality Assurance\approved QA\NCRWO RevE

Picklist Print

Tuesday, February 15, 2011 11:25:49 AM

Work Order ID: 66465

Parent Item: D2221

Parent Item Name: 350 Basket Base

Start Date: 2/16/2011 **Required Date:** 2/28/2011

Start Qty: 1.00 **Required Qty:** 1.00

D2232-3 Basket Hinge	Manufactured	No	100	Each	8.0000	2	2	11·03·08	
D2235-1 Basket Rib	Manufactured	No	100	Each	6.0000	2	2	11·03·08	
D2581 Mounting Bracket	Manufactured	No	100	Each	30.0000	2	2	11·03·08	
D3442-1 Shim	Manufactured	No	100	Each	25.0000	2	2	11·03·08	

Location	Loc Qty	Loc Code
WA	8	
64578	2	
65418	6	
WA	6	
64626	2	
64898	4	
WA	30	
64112	7	
65950	23	
ST	10	
64271	10	
WA	15	
65783	15	

Dart Aerospace Ltd

W/O:		WORK ORDER CHANGES					
DATE	STEP	PROCEDURE CHANGE	By	Date	Qty	Approval Chief Eng / Prod Mgr	Approval QC Inspector

Part No: _____ **PAR #:** _____ **Fault Category:** _____ **NCR:** Yes No **DQA:** _____ **Date:** _____

Resolution: _____ **Disposition:** _____ **QA: N/C Closed:** _____ **Date:** _____

NCR:		WORK ORDER NON-CONFORMANCE (NCR)						
DATE	STEP	Description of NC Section A	Corrective Action Section B			Verification Section C	Approval Chief Eng	Approval QC Inspector
			Initial Chief Eng	Action Description Chief Eng	Sign & Date			

NOTE: Date & initial all entries

H:\fFORMS\Quality Assurance\approved QA\NCRWO RevE

Picklist Print

Tuesday, February 15, 2011 11:25:49 AM

Work Order ID: 66465

Parent Item: D2221

Parent Item Name: 350 Basket Base

Start Date: 2/16/2011 **Required Date:** 2/28/2011

Start Qty: 1.00 **Required Qty:** 1.00

✓ D3825-041 Rib Assembly (Basket End)	Manufactured	No	100	Each	2.0000	2	2	B65419 (2x) DY 11·03·08

Location	Loc Qty	Loc Code
WA	2	
64577	2	

✓ D3826-041 Rib / Gusset Assembly	Manufactured	No	100	Each	8.0000	2	2	DY 11·03·08

Location	Loc Qty	Loc Code
WA	8	
64690	2	
65420	6	(2x)

✓ D3827-041 Rib Assembly (Inboard)	Manufactured	No	100	Each	10.0000	1	1	DY 11·03·08

Location	Loc Qty	Loc Code
WA	10	
64857	4	(1x)
65485	6	

✓ D3832-1 Mesh (Base)	Manufactured	No	100	Each	3.0000	1	1	DY 11·03·09

Location	Loc Qty	Loc Code
WA	3	
65313	3	(1x)

Dart Aerospace Ltd

W/O:		WORK ORDER CHANGES					
DATE	STEP	PROCEDURE CHANGE	By	Date	Qty	Approval Chief Eng / Prod Mgr	Approval QC Inspector

Part No: _____ **PAR #:** _____ **Fault Category:** _____ **NCR:** Yes No **DQA:** _____ **Date:** _____

Resolution: _____ **Disposition:** _____ **QA: N/C Closed:** _____ **Date:** _____

NCR:		WORK ORDER NON-CONFORMANCE (NCR)						
DATE	STEP	Description of NC Section A	Corrective Action Section B			Verification Section C	Approval Chief Eng	Approval QC Inspector
			Initial Chief Eng	Action Description Chief Eng	Sign & Date			

NOTE: Date & initial all entries

H:\fFORMS\Quality Assurance\approved QA\NCRWO RevE

Picklist Print

Tuesday, February 15, 2011 11:25:50 AM

Work Order ID: 66465

Parent Item: D2221

Parent Item Name: 350 Basket Base

Start Date: 2/16/2011 **Required Date:** 2/28/2011

Start Qty: 1.00 **Required Qty:** 1.00

D3833-1 Mesh (Base End Face)	Manufactured	No	100	Each	18.0000	2	2	SG 11·03·09

Location	Loc Qty	Loc Code
WA	18	
64246	2	
64891	8	
65937	8	

2x

Dart Aerospace Ltd

W/O:		WORK ORDER CHANGES					
DATE	STEP	PROCEDURE CHANGE	By	Date	Qty	Approval Chief Eng / Prod Mgr	Approval QC Inspector

Part No: _____ **PAR #:** _____ **Fault Category:** _____ **NCR:** Yes No **DQA:** _____ **Date:** _____

Resolution: _____ **Disposition:** _____ **QA: N/C Closed:** _____ **Date:** _____

NCR:		WORK ORDER NON-CONFORMANCE (NCR)						
DATE	STEP	Description of NC Section A	Corrective Action Section B			Verification Section C	Approval Chief Eng	Approval QC Inspector
			Initial Chief Eng	Action Description Chief Eng	Sign & Date			

NOTE: Date & initial all entries

H:\fFORMS\Quality Assurance\approved QA\NCRWO RevE

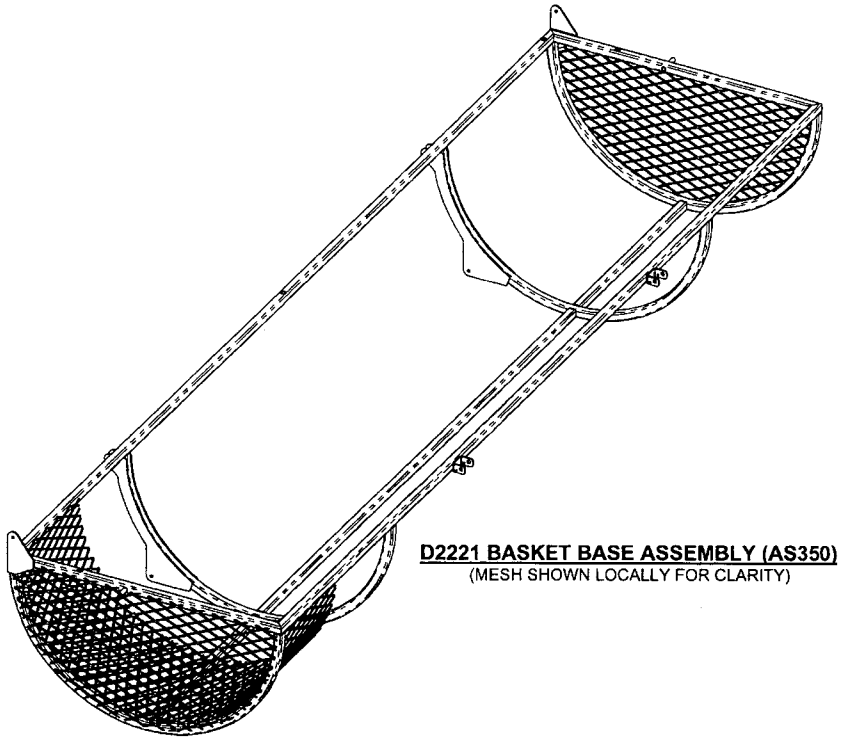

D2221 BASKET BASE ASSEMBLY (AS350)
(MESH SHOWN LOCALLY FOR CLARITY)

ITEM	QTY	P/N	DESCRIPTION
1	X	D2221	**BASKET BASE ASSEMBLY (AS350)**
2	1	D2221-1	RIB
3	2	D2221-5	RIB
4	1	D2221-7	RIB
5	2	D2232-3	BASKET HINGE
6	2	D2235-1	RIB
7	2	D2581	MOUNTING BRACKET
8	2	D3442-1	SHIM
9	2	D3825-041	RIB ASSY (BASKET END)
10	2	D3826-041	RIB/GUSSET ASSY
11	1	D3827-041	RIB ASSY (INBOARD)
12	2	D3833-1	MESH, BASE END FACE
13	1	D3832-1	MESH (BASE)

#66465

REVISED 08/11/18

REV.	DESCRIPTION	BY	DATE
H	REVISED PARTS LIST AND ADDED "ITEM" COLUMN TO PARTS LIST (ZN D3-1); REVISED SECTIONS A-A, B-B AND C-C (ZN C6-3, C2-3 AND A6-3); REVISED DETAIL D (ZN B7-4); ADDED DETAIL E (ZN A6-4); ADDED SECTION F-F (ZN B2-4); ADDED DWG DETAILS FOR D2221-1/-5/-7 (SHEET 5); TOL REVISED TO 2 DEC PLACES (ZN D8-3 AND ZN B4-3); D3825-041 REPLACES D2221-3/D2327-3; D3826-041 REPLACES D2235-1/D2325; D3827-041 REPLACES D2221-1 ON INBOARD SIDE; ADDED D3832-1 AND D3833-1. REASON: SATISFY "LEAN MANUFACTURING" PROGRAM.	MB	08.09.18
G	MATERIAL FOR -1, -3, -5 & -7 WAS 0.060 WALL; TOLERANCE FOR 96.00 DIM WAS +/-0.01 AND 56.00 DIM WAS REF (ZN B5-2); 19.62 DIM WAS "HARD" DIMENSION IS NOW "REF" (ZN B4-2); NOTE 5 TRANSFERED FROM SHT 1 TO SHT 2; SHT 2 MESH MATERIAL UPDATED; DRAWING TRANSFERED TO "B" FORMAT	AJS	08.06.16
F	ADD SHIM UNDER HINGE; ADD HOLES FOR SPLIT LID BASKET	PH	05.06.07
E	CHANGE HINGE	CP	01.04.19
D	CHANGE LATCH	BW	96.06.21
C	SEPARATE BASKET AND LID	KH	95.11.21

NOTES:
1) MATERIAL: N/A
2) FINISH: POWDER COAT GLOSS WHITE (4.3.5.2) PER DART QSI 005 4.3
3) TOLERANCES: PER DART QSI 018 UNLESS OTHERWISE NOTED
4) UNITS: INCHES UNLESS OTHERWISE NOTED
5) BREAK SHARP EDGES: 0.005 TO 0.010 MAX
6) IDENTIFICATION: N/A
8) WEIGHT: 42.00 lbs APPROX
9) MASK ALL HOLES PRIOR TO POWDER COATING

DESIGN	BW
DRAWN	
CHECKED	
MFG. APPR.	
APPROVED	
DE APPR.	
DATE	08.09.18

DART AEROSPACE LTD
HAWKESBURY, ONTARIO, CANADA

DRAWING NO. D2221 — REV. H — SHEET 1 OF 5

TITLE: BASKET BASE ASSEMBLY (350) — SCALE: NTS

COPYRIGHT © 1994 BY DART AEROSPACE LTD
THIS DOCUMENT IS PRIVATE AND CONFIDENTIAL AND IS SUPPLIED ON THE EXPRESS CONDITION THAT IT IS NOT TO BE USED FOR ANY PURPOSE OR COPIED OR COMMUNICATED TO ANY OTHER PERSON WITHOUT WRITTEN PERMISSION FROM DART AEROSPACE LTD

Dart Aerospace Ltd

W/O:		WORK ORDER CHANGES					
DATE	STEP	PROCEDURE CHANGE	By	Date	Qty	Approval Chief Eng / Prod Mgr	Approval QC Inspector

Part No: _____ **PAR #:** _____ **Fault Category:** _____ **NCR:** Yes No **DQA:** _____ **Date:** _____

Resolution: _____ **Disposition:** _____ **QA: N/C Closed:** _____ **Date:** _____

NCR:		WORK ORDER NON-CONFORMANCE (NCR)						
DATE	STEP	Description of NC Section A	Corrective Action Section B			Verification Section C	Approval Chief Eng	Approval QC Inspector
			Initial Chief Eng	Action Description Chief Eng	Sign & Date			

NOTE: Date & initial all entries

H:\fFORMS\Quality Assurance\approved QA\NCRWO RevE

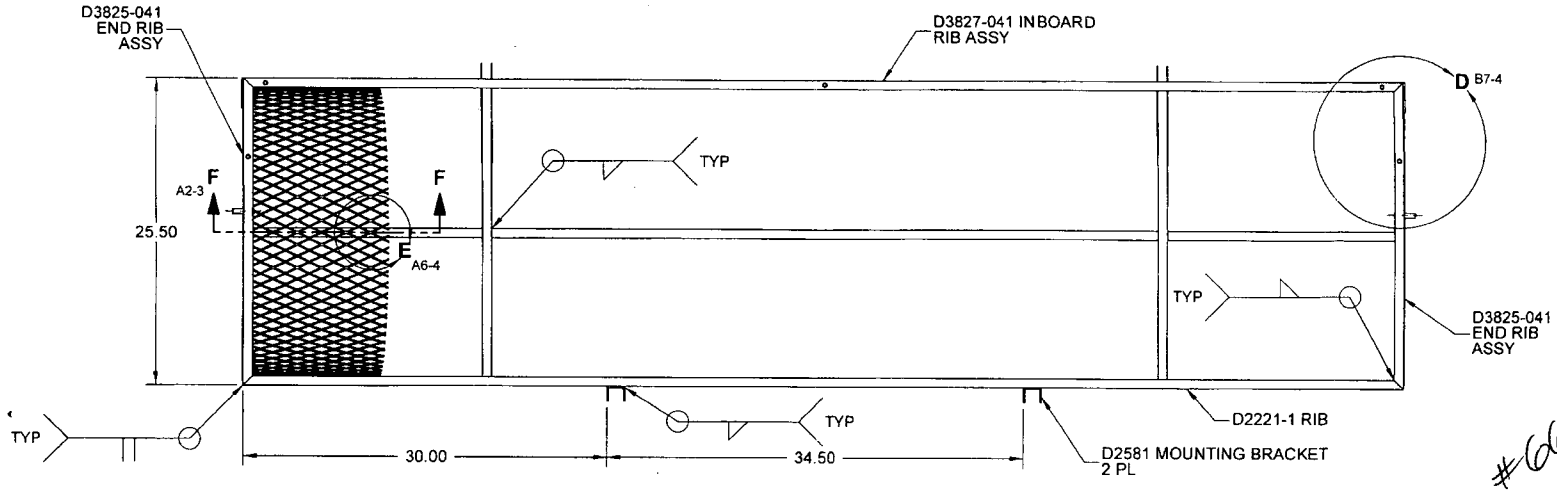

#66465

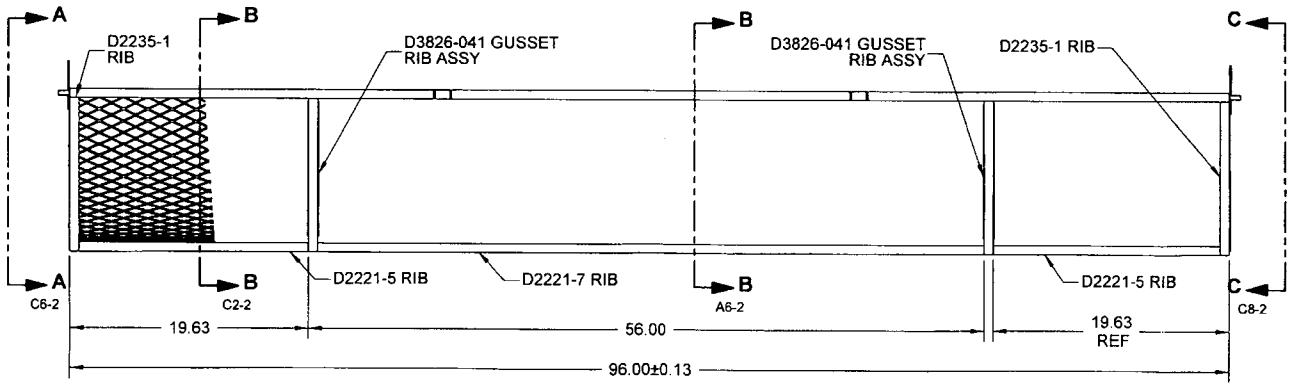

RELEASED 08/11/18

D2221 BASKET BASE ASSEMBLY (350)
(MESH SHOWN LOCALLY FOR CLARITY)

DESIGN	BW	**DART AEROSPACE LTD** HAWKESBURY, ONTARIO, CANADA
DRAWN		
CHECKED		DRAWING NO. D2221 — REV. H — SHEET 2 OF 5
MFG. APPR.		
APPROVED		TITLE: BASKET BASE ASSEMBLY (350) — SCALE: NTS
DE APPR.		
DATE	08.09.18	

COPYRIGHT © 1994 BY DART AEROSPACE LTD
THIS DOCUMENT IS PRIVATE AND CONFIDENTIAL AND IS SUPPLIED ON THE EXPRESS CONDITION THAT IT IS NOT TO BE USED FOR ANY PURPOSE OR COPIED OR COMMUNICATED TO ANY OTHER PERSON WITHOUT WRITTEN PERMISSION FROM DART AEROSPACE LTD

Dart Aerospace Ltd

W/O:		WORK ORDER CHANGES					
DATE	STEP	PROCEDURE CHANGE	By	Date	Qty	Approval Chief Eng / Prod Mgr	Approval QC Inspector

Part No: _____ **PAR #:** _____ **Fault Category:** _____ **NCR:** Yes No **DQA:** _____ **Date:** _____

Resolution: _____ **Disposition:** _____ **QA: N/C Closed:** _____ **Date:** _____

NCR:		WORK ORDER NON-CONFORMANCE (NCR)						
DATE	STEP	Description of NC Section A	Corrective Action Section B			Verification Section C	Approval Chief Eng	Approval QC Inspector
			Initial Chief Eng	Action Description Chief Eng	Sign & Date			

NOTE: Date & initial all entries

*H:\fFORMS\Quality Assurance\approved QA\NCRWO RevE

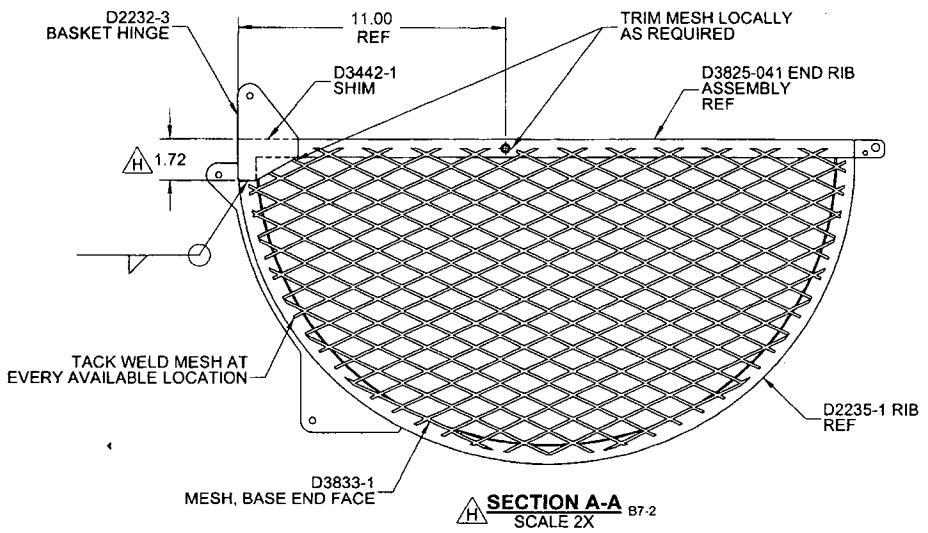

H **SECTION A-A** B7-2
SCALE 2X

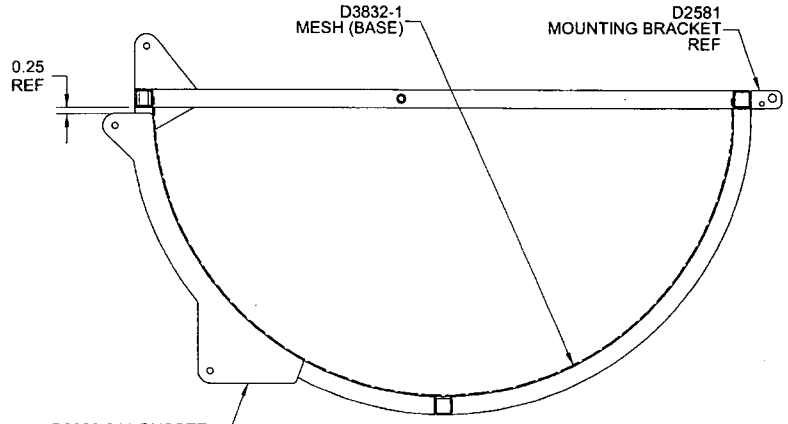

H **SECTION B-B** B6-2 B4-2
(D3833-1 MESH NOT SHOWN FOR CLARITY)
SCALE 2X

#66465

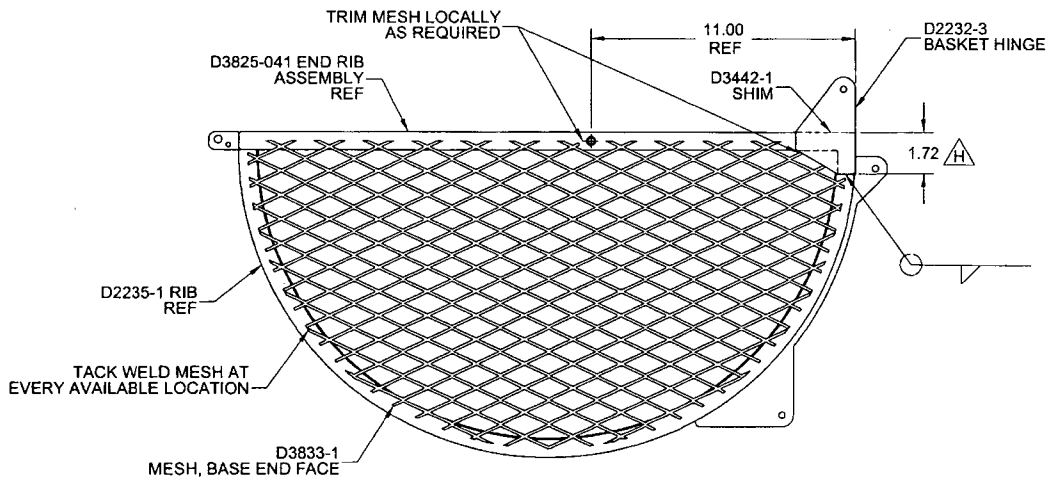

H **SECTION C-C** B2-2
SCALE 2X

RELEASED 08/11/18

DESIGN	BW	**DART AEROSPACE LTD** HAWKESBURY, ONTARIO, CANADA
DRAWN		
CHECKED		DRAWING NO. D2221 — REV. H — SHEET 3 OF 5
MFG. APPR.		
APPROVED		TITLE: BASKET BASE ASSEMBLY (350) — SCALE: NTS
DE APPR.		
DATE	08.09.18	

COPYRIGHT © 1994 BY DART AEROSPACE LTD
THIS DOCUMENT IS PRIVATE AND CONFIDENTIAL AND IS SUPPLIED ON THE EXPRESS CONDITION THAT IT IS NOT TO BE USED FOR ANY PURPOSE OR COPIED OR COMMUNICATED TO ANY OTHER PERSON WITHOUT WRITTEN PERMISSION FROM DART AEROSPACE LTD

Dart Aerospace Ltd

W/O:		WORK ORDER CHANGES					
DATE	STEP	PROCEDURE CHANGE	By	Date	Qty	Approval Chief Eng / Prod Mgr	Approval QC Inspector

Part No: _____ **PAR #:** _____ **Fault Category:** _____ **NCR:** Yes No **DQA:** _____ **Date:** _____

Resolution: _____ **Disposition:** _____ **QA: N/C Closed:** _____ **Date:** _____

NCR:		WORK ORDER NON-CONFORMANCE (NCR)						
DATE	STEP	Description of NC Section A	Corrective Action Section B			Verification Section C	Approval Chief Eng	Approval QC Inspector
			Initial Chief Eng	Action Description Chief Eng	Sign & Date			

NOTE: Date & initial all entries

H:\fFORMS\Quality Assurance\approved QA\NCRWO RevE

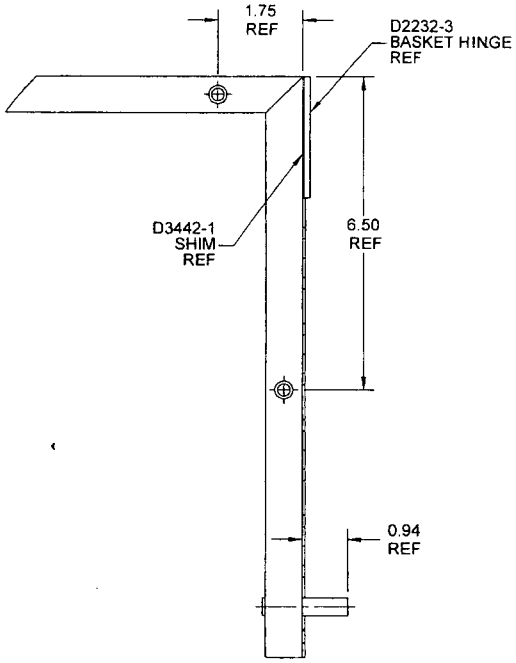

H DETAIL D SCALE 4X D2-2

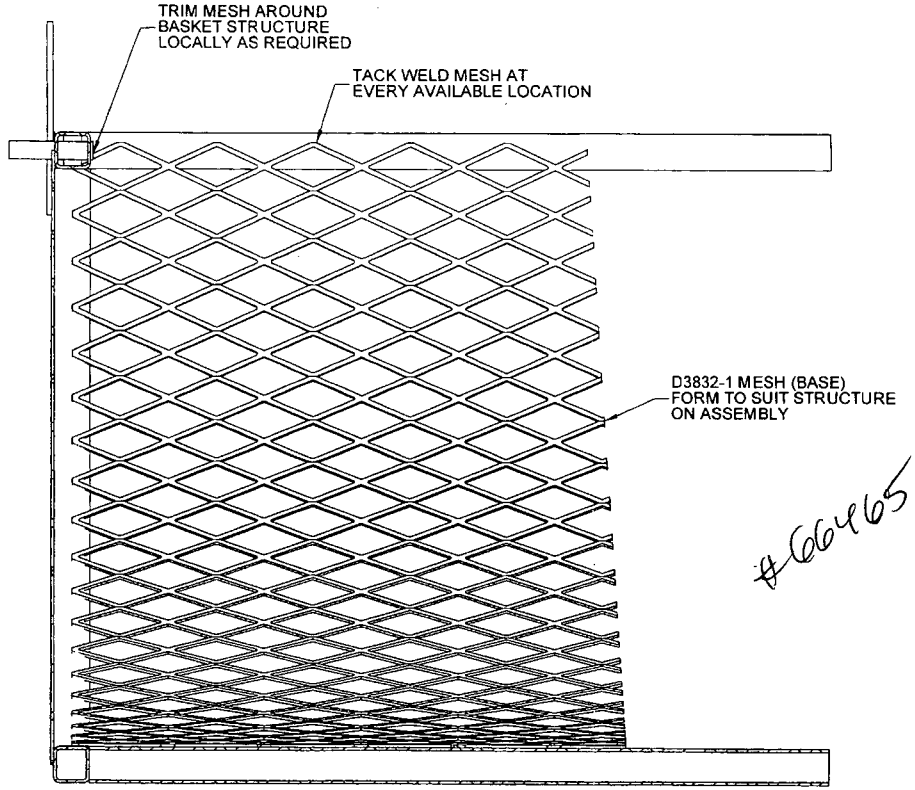

H SECTION F-F SCALE 4X D7-2

#66465

RELEASED 02/11/18 MJD

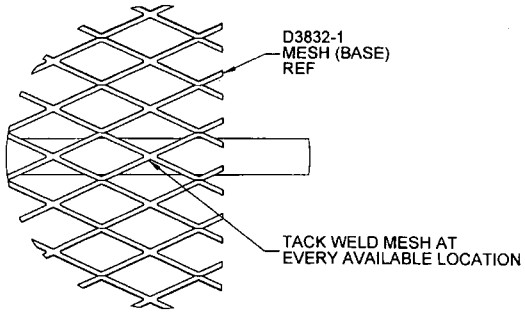

H DETAIL E SCALE 4X C6-2

DESIGN	BW	**DART AEROSPACE LTD** HAWKESBURY, ONTARIO, CANADA
DRAWN		
CHECKED		DRAWING NO. D2221 — REV. H — SHEET 4 OF 5
MFG. APPR.		
APPROVED		TITLE: BASKET BASE ASSEMBLY (350) — SCALE: NTS
DE APPR.		
DATE	08.09.18	

COPYRIGHT © 1994 BY DART AEROSPACE LTD
THIS DOCUMENT IS PRIVATE AND CONFIDENTIAL AND IS SUPPLIED ON THE EXPRESS CONDITION THAT IT IS NOT TO BE USED FOR ANY PURPOSE OR COPIED OR COMMUNICATED TO ANY OTHER PERSON WITHOUT WRITTEN PERMISSION FROM DART AEROSPACE LTD.

Dart Aerospace Ltd

W/O:		WORK ORDER CHANGES					
DATE	STEP	PROCEDURE CHANGE	By	Date	Qty	Approval Chief Eng / Prod Mgr	Approval QC Inspector

Part No: _____ **PAR #:** _____ **Fault Category:** _____ **NCR:** Yes No **DQA:** _____ **Date:** _____

Resolution: _____ **Disposition:** _____ **QA: N/C Closed:** _____ **Date:** _____

NCR:		WORK ORDER NON-CONFORMANCE (NCR)						
DATE	STEP	Description of NC Section A	Corrective Action Section B			Verification Section C	Approval Chief Eng	Approval QC Inspector
			Initial Chief Eng	Action Description Chief Eng	Sign & Date			

NOTE: Date & initial all entries

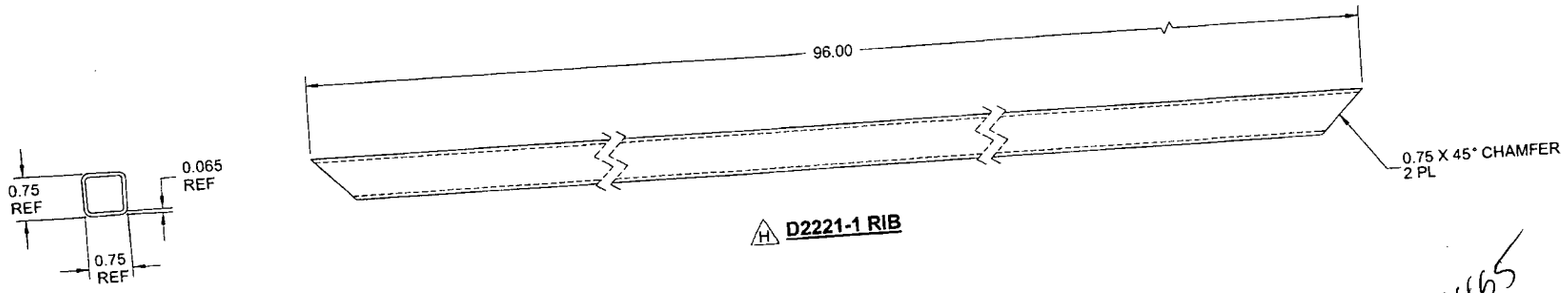

H D2221-1 RIB

#66465

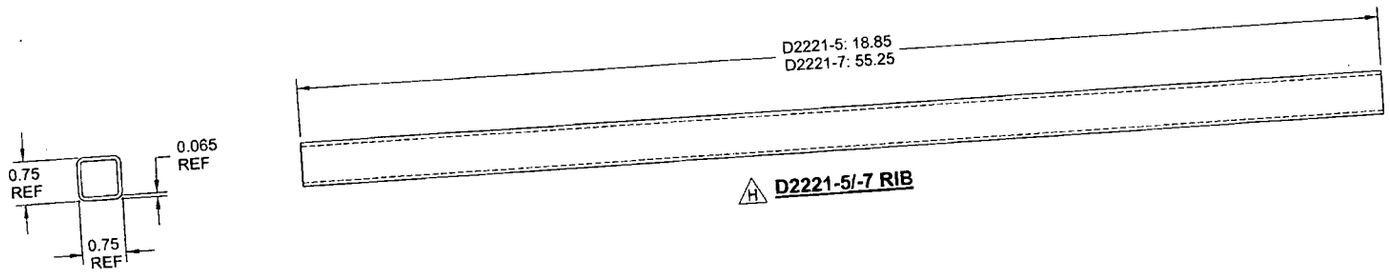

H D2221-5/-7 RIB

RELEASED 08/11/18

NOTES:
1) MATERIAL: AISI 304/316 STAINLESS STEEL SQUARE TUBE, 0.75 X 0.75 X 0.065 WALL
REF. DART SPEC. M304TS0.750W0.065
2) FINISH: NONE
3) TOLERANCES: PER DART QSI 018 UNLESS OTHERWISE NOTED
4) UNITS: INCHES UNLESS OTHERWISE NOTED
5) BREAK SHARP EDGES: 0.005 TO 0.010 MAX
6) IDENTIFICATION: N/A
8) WEIGHT:D2221 -1 = 4.57 lbs; D2221-5 = 0.90 lbs; D2221-7 2.65 = lbs

DESIGN	BW	DART AEROSPACE LTD HAWKESBURY, ONTARIO, CANADA
DRAWN		REV. H
CHECKED		DRAWING NO. D2221 — SHEET 5 OF 5
MFG. APPR.		SCALE
APPROVED		TITLE BASKET BASE ASSEMBLY (350) — NTS
DE APPR.		
DATE	08.09.18	

COPYRIGHT © 1994 BY DART AEROSPACE LTD
THIS DOCUMENT IS PRIVATE AND CONFIDENTIAL AND IS SUPPLIED ON THE EXPRESS CONDITION THAT IT IS NOT TO BE USED FOR ANY PURPOSE OR COPIED OR COMMUNICATED TO ANY OTHER PERSON WITHOUT WRITTEN PERMISSION FROM DART AEROSPACE LTD

Dart Aerospace Ltd

W/O:		
DATE	STEP	PROCEDURE CHANGE

WORK ORDER CHANGES

By	Date	Qty	Approval Chief Eng / Prod Mgr	Approval QC Inspector

Part No: _____ PAR #: _____ Fault Category: _____ NCR: Yes No DQA: _____ Date: _____

Resolution: _____ Disposition: _____ QA: N/C Closed: _____ Date: _____

NCR:		
DATE	STEP	Description of NC Section A

WORK ORDER NON-CONFORMANCE (NCR)

Corrective Action Section B					
Initial Chief Eng	Action Description Chief Eng	Sign & Date	Verification Section C	Approval Chief Eng	Approval QC Inspector

te & initial all entries

uality Assurance\approved QA\NCRWO RevE